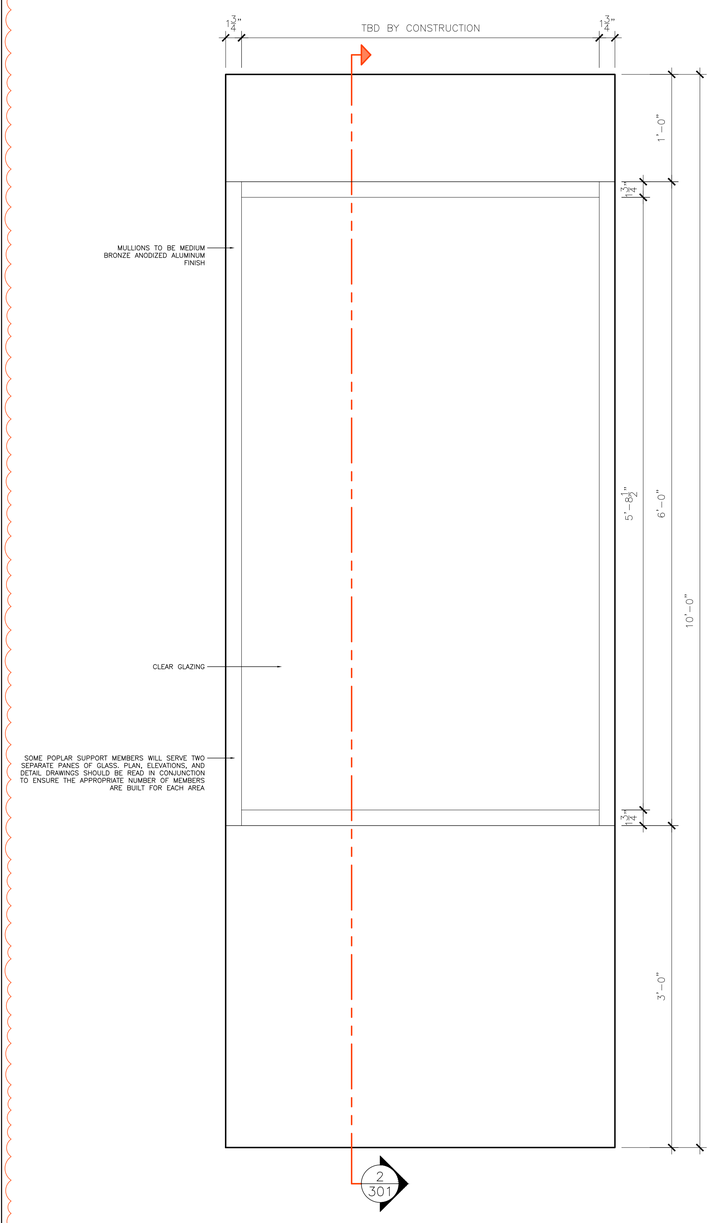

1 / 301 TYPICAL WINDOW ELEVATION
SCALE: 1-1/2"" = 1'-0"

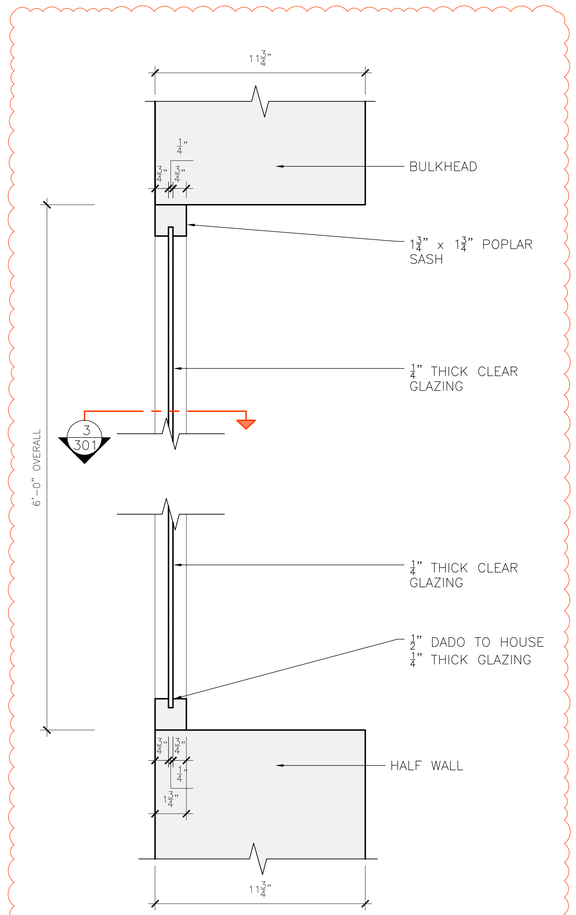

2 / 301 TYPICAL WINDOW LONGITUDINAL SECTION
SCALE: 3" = 1'-0"

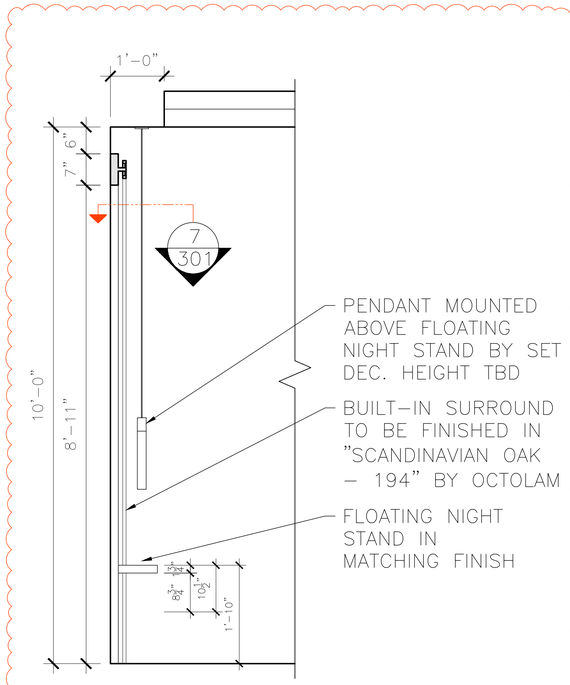

5 / 301 JULES' HEADBOARD WALL MILLWORK SECTION
SCALE: 1/2" = 1'-0"

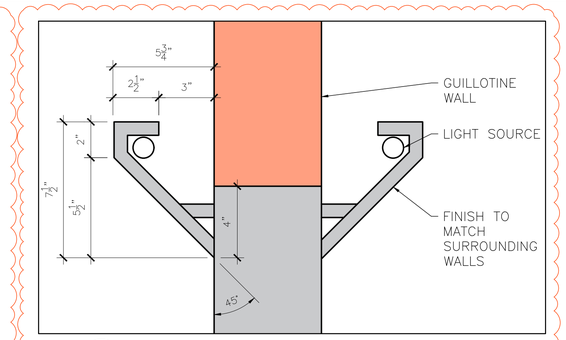

6 / 301 GUILLOTINE WALL COVE LIGHT DETAIL
SCALE: 3" = 1'-0"

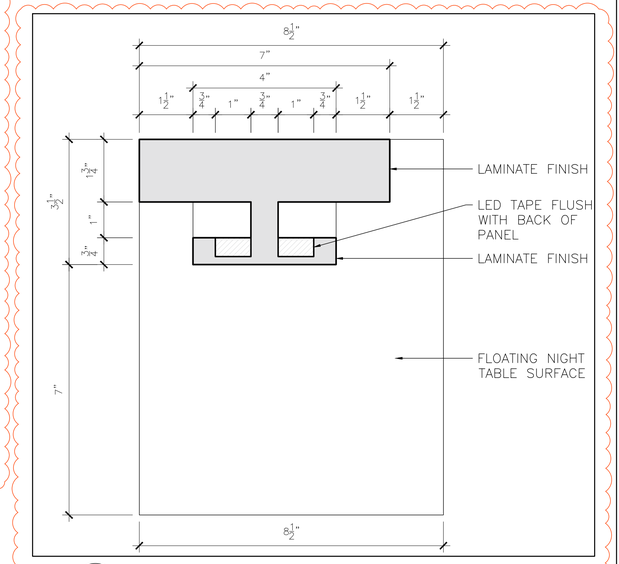

7 / 301 JULES' HEADBOARD WALL MILLWORK SECTION
SCALE: 3" = 1'-0"

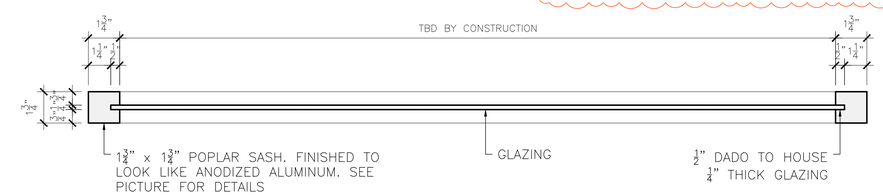

3 / 301 TYPICAL WINDOW TRANSVERSE SECTION
SCALE: 3" = 1'-0"

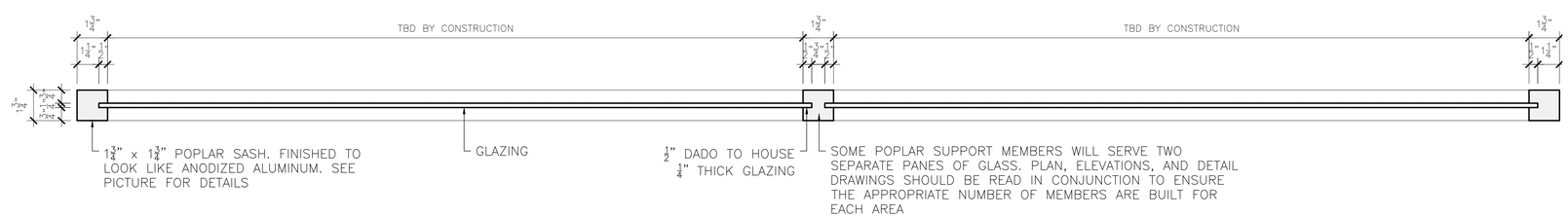

4 / 301 TYPICAL MULTI-WINDOW TRANSVERSE SECTION
SCALE: 3" = 1'-0"

0 / 301 LOCATION REFERENCE

REVISED
SEP 20/22

ORPHAN BLACK: ECHOES	ORPHAN BLACK SPINOFF PRODUCTIONS LTD. 2489 STANFIELD RD. MISSISSAUGA, ON. L5Y1S2 T: 647.659.5010	Production Designer: AIDAN LEROUX	Set name.: INT. JULES' CONDO	Date: SEP 12, 2022	Scale: AS NOTED	Revised: SEP 20, 2022	Revision no.: 01	Set no.: S041	Sheet no.: 301
		Art Director: ALDER DUNLAP	Location address: STUDIO	Drawn by: E.S.	Sheet name: DETAILS (PAGE 1)				